Basic Electrical Engineering Information

Introduction

Electrical engineering deals with electricity, electro-magnetism and electronics. It also covers power, control systems, telecommunications and signal processing. Electrical engineers are usually concerned with large-scale electrical systems such as motor control and power transmission, as well as utilizing electricity to transmit energy. Electrical engineers may work on a diverse range of technologies, from the design of household appliances, lighting and wiring of buildings, telecommunication systems, electrical power stations and satellite communications.

Basic Elements of Circuit Analysis/Design

Term	Definition	Symbol/Unit
Voltage	The quantitative expression of the potential difference in charge between two points in an electrical field.	Volts or V
Current	The flow of electrons	Amperes or A
Resistance	The opposition that a substance offers to the flow of electric current	Ohms or Ω
Ground	The reference point in the circuit where the voltage is 0.	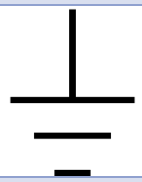
Voltage Source	A two terminal device which can maintain a fixed voltage	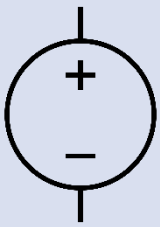

Components

Term	Definition	Picture	Layout
Resistor	A Component to control the current flow in a circuit.		
Potentiometer	A resistor which resistance value can be manually changed.		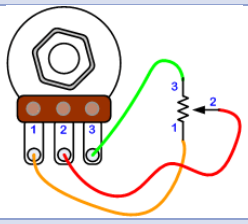
Photoresistor	A resistor which resistance value is changed based on light. The resistance decreases with a higher light intensity		
LED	Light emitting diode, that is activated when a enough voltage is passed through it.		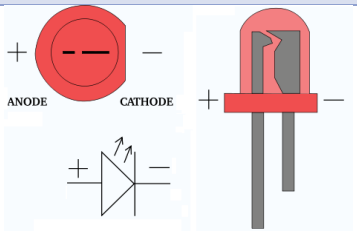
Seven Segment Display	An electronic display device for displaying decimal numerals that is an alternative to the more complex dot matrix displays.	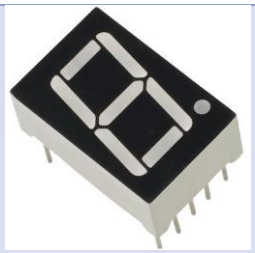	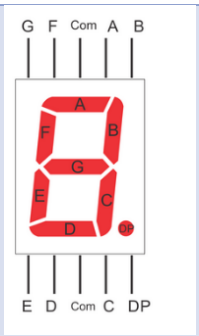

	Com represents ground, and it must be connected to ground in order for the rest of the Lights to function		
Capacitor	A component that stores voltage in an electrical field		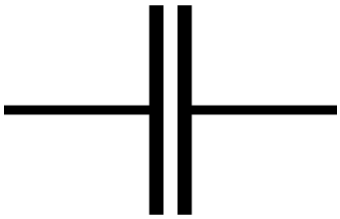
PIR Motion Sensor	A Sensor that sends out a voltage if motion is detected	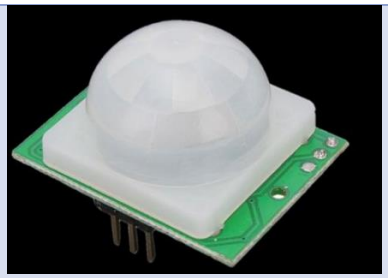	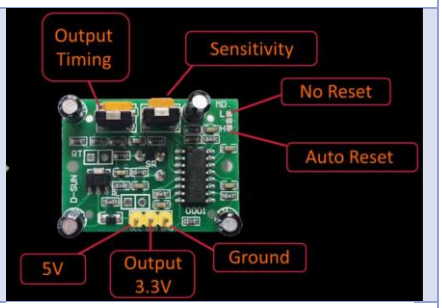
Tactile Button Switch	A switch that can connect two components together through the press of the button.		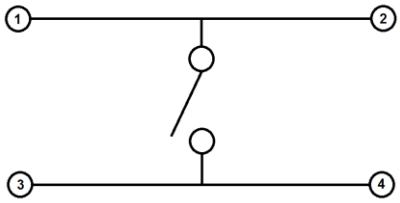
Toggle Switch	A switch that can connect two components together through the position of the switch		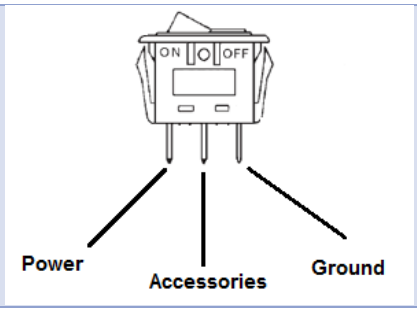

Fundamental Circuit Configurations

Ohms Law

Ohm's Law deals with the relationship between voltage and current in an ideal conductor. This relationship states that:

The potential difference (voltage) across an ideal conductor is proportional to the current through it.

Equation

V = IR

Voltage = Current * Resistance

Series Circuits

Simple series circuits, all components are connected end-to-end to form only one path for electrons to flow through the circuit.

Summary

- All components share the same current
- Resistance can be simplified by adding them together
  - $R_{Total} = R_1 + R_2 .... + R_n$

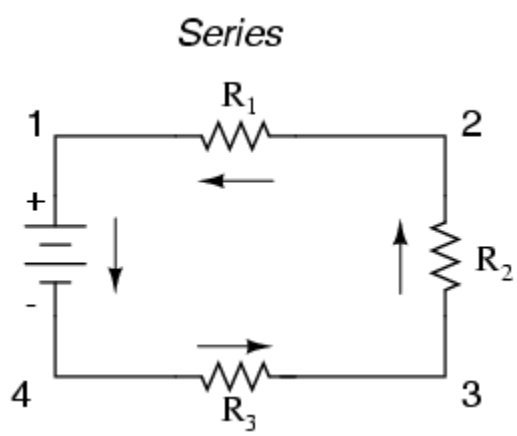

Figure 1 | Series Schematic

Parallel Circuits

Simple parallel circuits, all components are connected between the same two sets of electrically common points, creating multiple paths for electrons to flow from one end of the battery to the other.

Summary

- All components share the same voltage
- Resistance can be simplified by adding them together
  - $\frac{1}{\text{RTotal}} = \frac{1}{\text{R1}} + \frac{1}{\text{R1}} + ... + \frac{1}{\text{Rn}}$

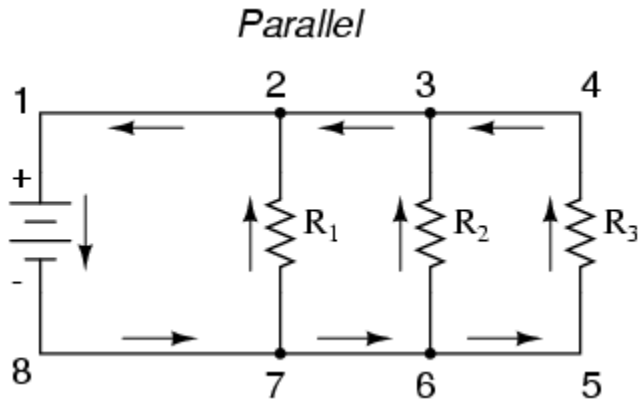

Figure 2 | Parallel Schematic

Unit Table

TABLE 1.5 Selected Prefixes Used in the Metric System

Prefix	Abbreviation	Meaning	Example
Giga	G	10^9	1 gigameter (Gm) $= 1 \times 10^9$ m
Mega	M	10^6	1 megameter (Mm) $= 1 \times 10^6$ m
Kilo	k	10^3	1 kilometer (km) $= 1 \times 10^3$ m
Deci	d	10^{-1}	1 decimeter (dm) $= 0.1$ m
Centi	c	10^{-2}	1 centimeter (cm) $= 0.01$ m
Milli	m	10^{-3}	1 millimeter (mm) $= 0.001$ m
Micro	μ[a]	10^{-6}	1 micrometer (μm) $= 1 \times 10^{-6}$ m
Nano	n	10^{-9}	1 nanometer (nm) $= 1 \times 10^{-9}$ m
Pico	p	10^{-12}	1 picometer (pm) $= 1 \times 10^{-12}$ m
Femto	f	10^{-15}	1 femtometer (fm) $= 1 \times 10^{-15}$ m

[a]This is the Greek letter mu (pronounced "mew").

Figure 3 | Metric System Table

How to read a resistor

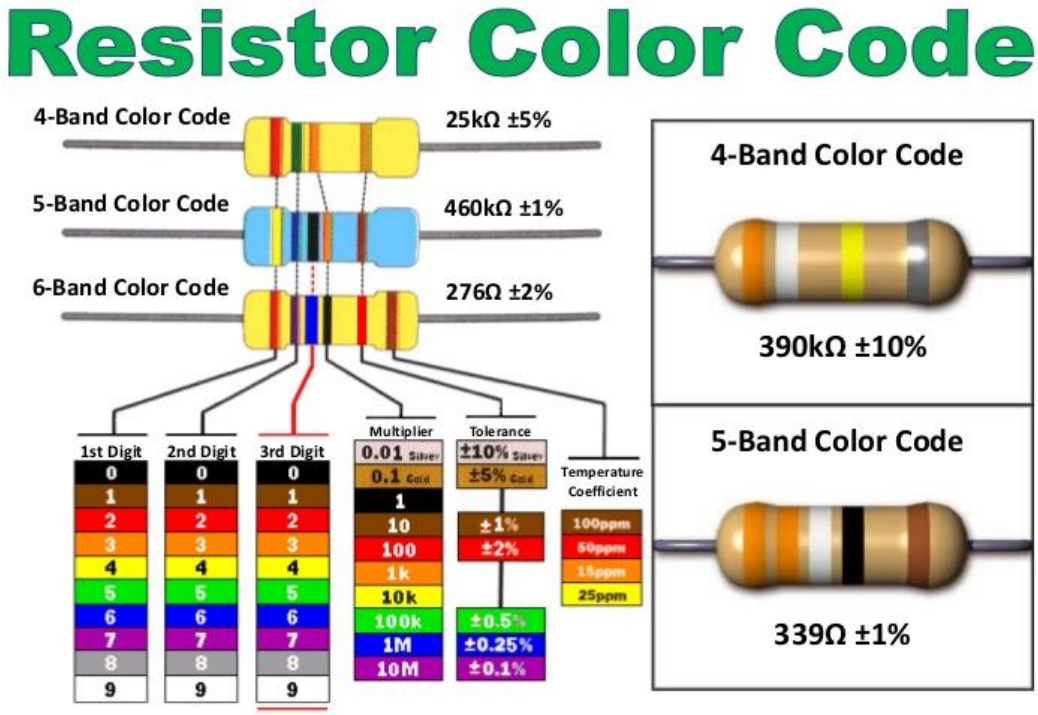

Figure 4 | Reading Resistor Guide

The 1st Color represents the 1st Digit represents the 100's place

The 2nd Color represents the 2nd Digit represents the 10's place

The 3rd Color represents the 3nd Digit represents the 1's place

The 4th Color represents the Multiplier

Example

To find a 420 MΩ

1st Digit Color = Yellow = 400

2nd Digit Color = Red = 20

3rd Digit Color = Black = 0

4th Color = Blue = 1 Mega

(1st Digit Color + 2nd Digit Color + 3rd Digit Color) * 4th Color = (400 + 20 + 0)* 1M = 420MΩ

Digital Multimeter(DMM)

A digital multimeter (DMM) is a test tool used to measure two or more electrical values—principally voltage (volts), current (amps) and resistance (ohms). It is a standard diagnostic tool for technicians in the electrical/electronic industries.

DMM Labels

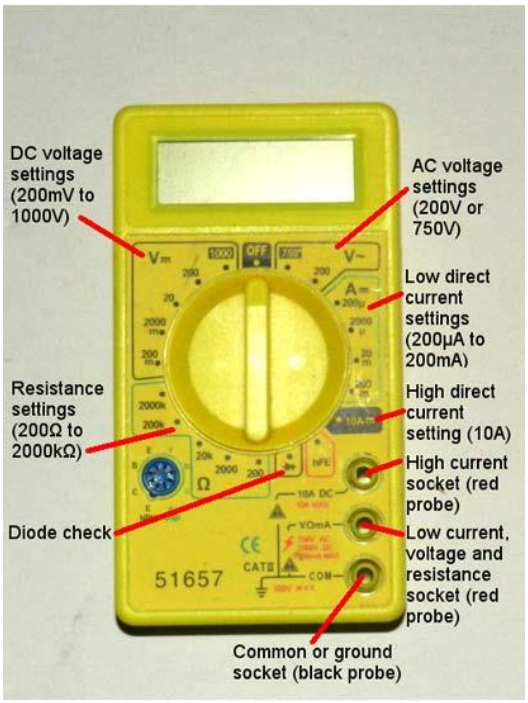

Figure 5 | DMMs Settings

How to Measure Voltage

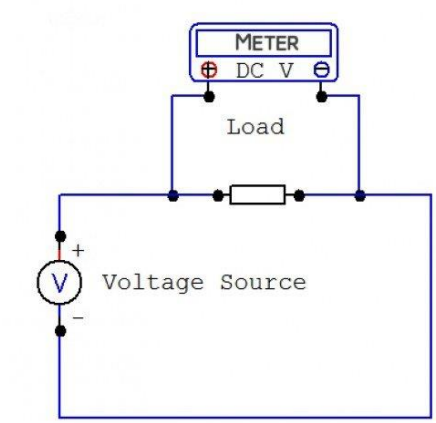

Figure 6 | Measuring Voltage

To measure voltage, the Digital Multimeter must be connected in **parallel** to the component that is being measured.

How to Measure Current

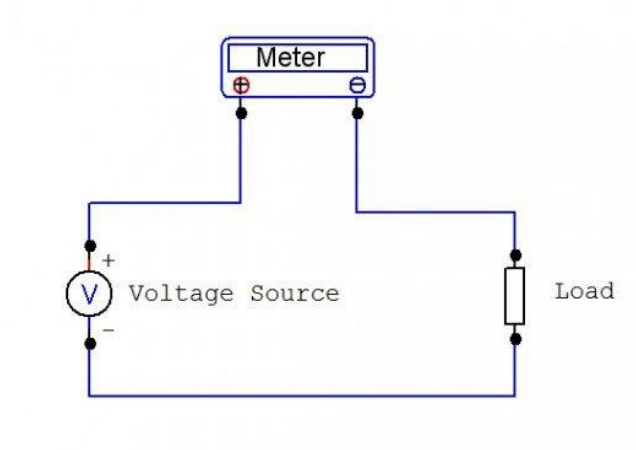

Figure 7 | Measuring Current

To measure current, the Digital Multimeter must be connected in **series** to the component that is being measured.

Breadboard

A breadboard is a great tool for quickly testing out a prototype circuit or hooking up a quick experiment.

How a Breadboard Works

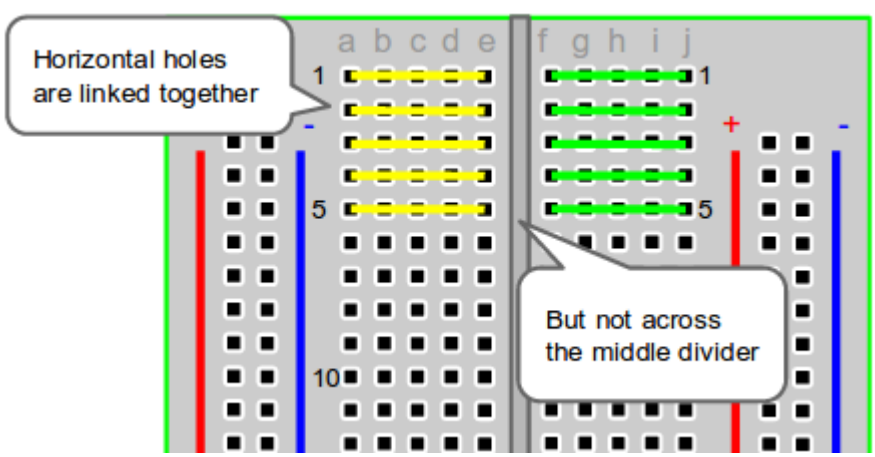

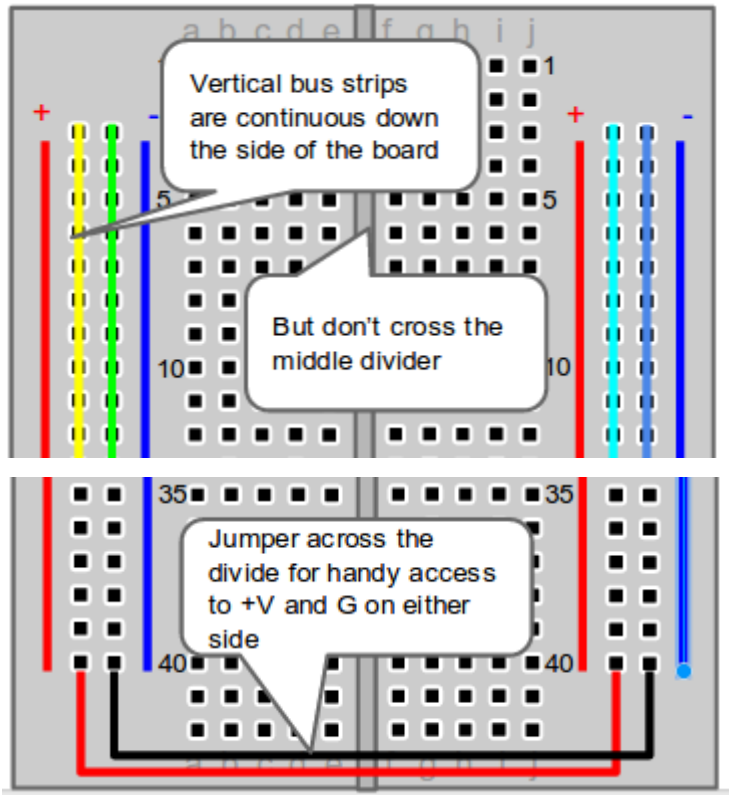

Figure 8 | How to use a Breadboard

Breadboard Example

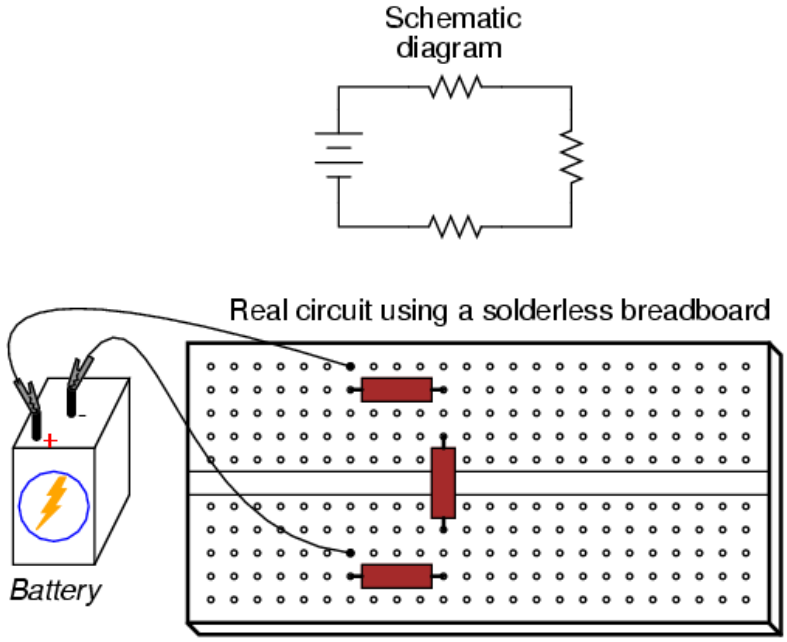

Figure 9 | A simple Series Circuit on a breadboard

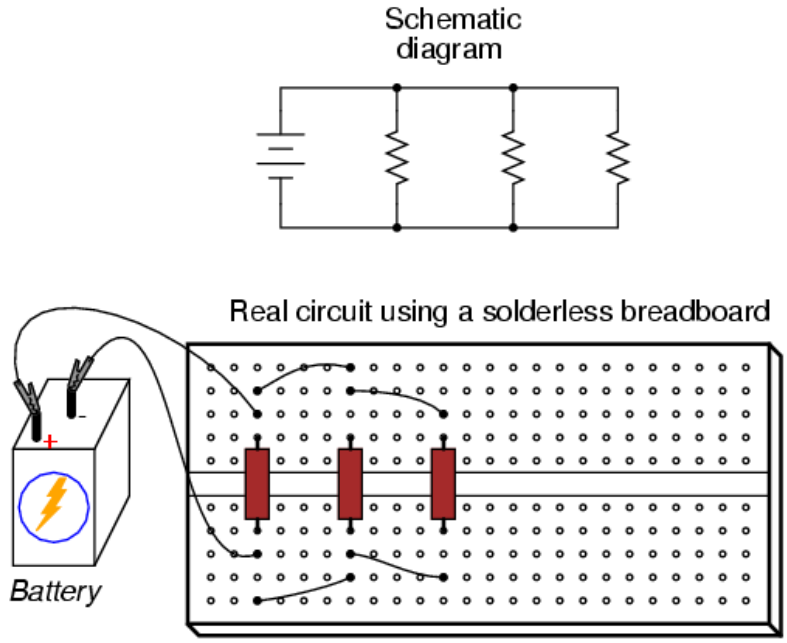

Figure 10 | A simple Parallel Circuit on a breadboard